TRANSFER UNIT

COMPONENTS
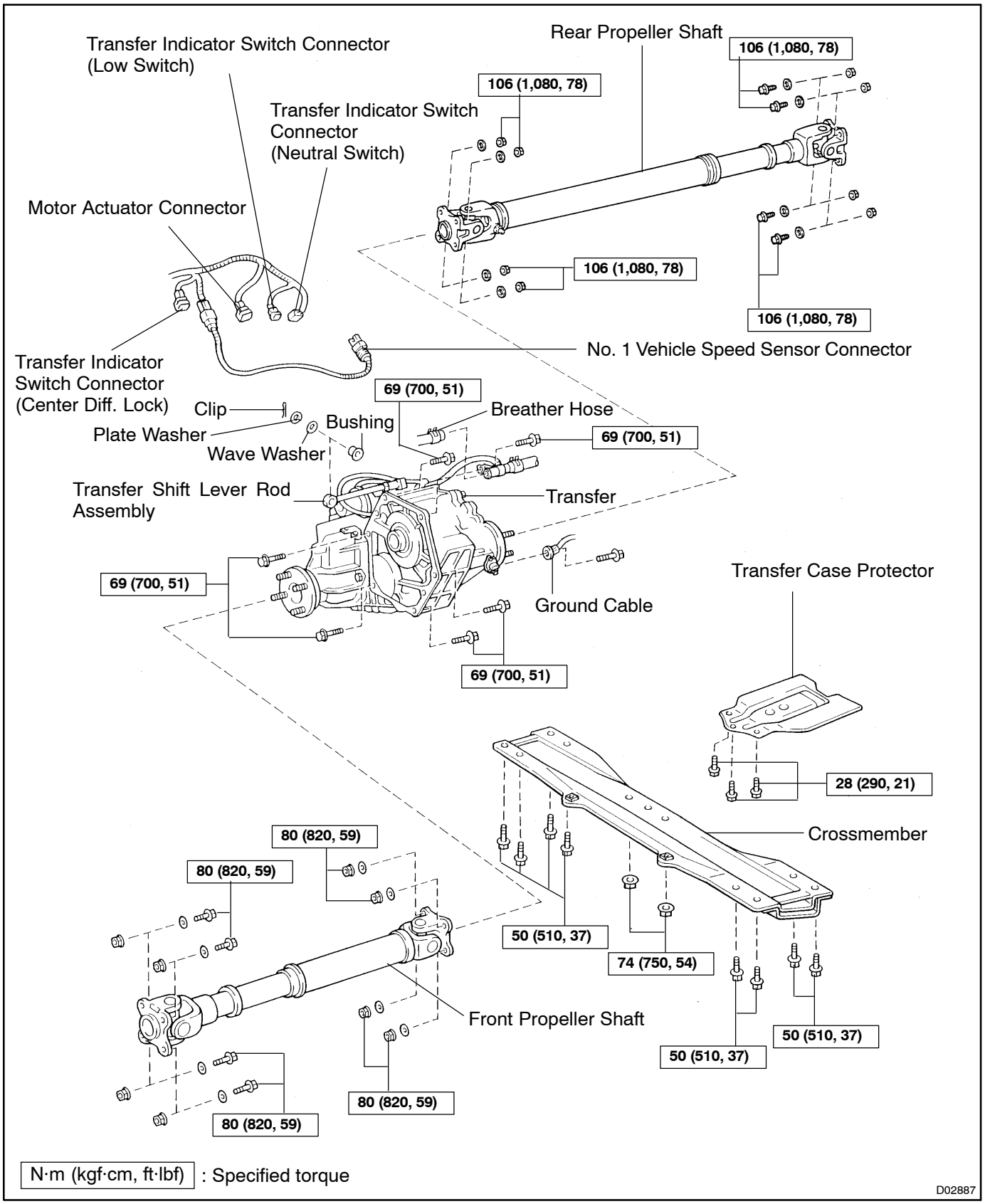
TR04I–03